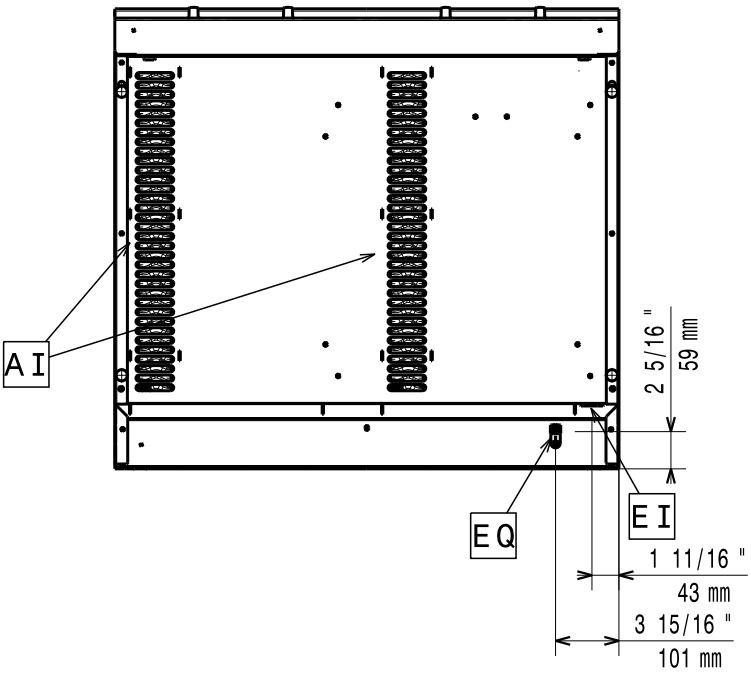
AI
EQ
EI
2 5/16 "
59 mm
1 11/16 "
43 mm
3 15/16 "
101 mm

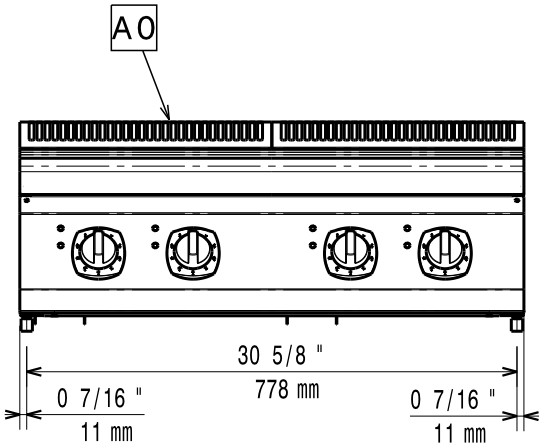
AO
30 5/8 "
778 mm
0 7/16 "
11 mm
0 7/16 "
11 mm

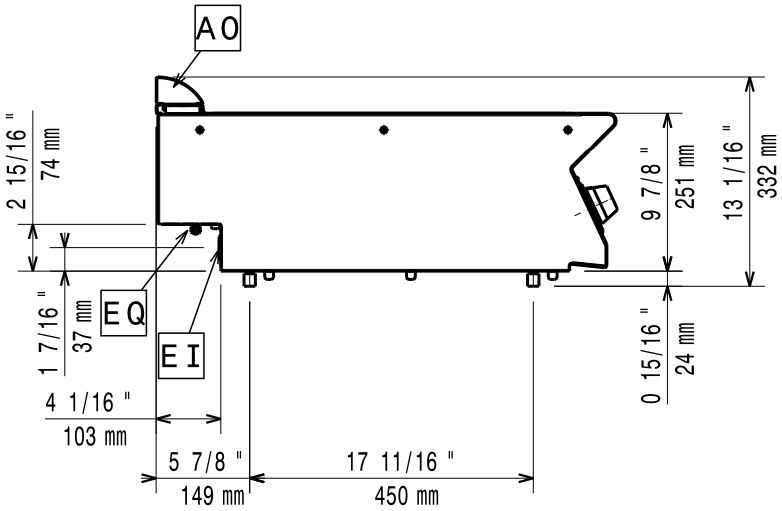
AO
2 15/16 "
74 mm
1 7/16 "
37 mm
EQ
EI
4 1/16 "
103 mm
5 7/8 "
149 mm
17 11/16 "
450 mm
9 7/8 "
251 mm
13 1/16 "
332 mm
0 15/16 "
24 mm

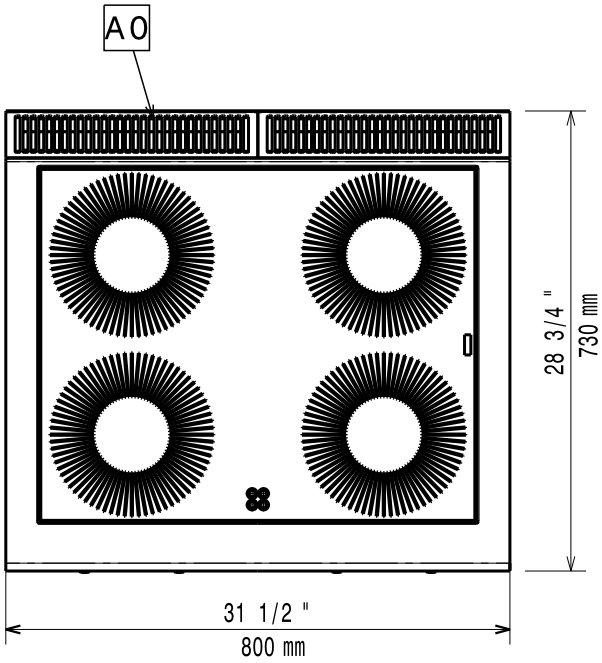
AO
28 3/4 "
730 mm
31 1/2 "
800 mm

597855X00